KNIFE HOLDER.

SHEAR CUT KNIFE HOLDER.

Type PSGs-DF 50

Knife holder width	50 mm
Knife diameter	130 mm optional: 150 mm
Operating pressure vertical	4–6 bar
Operating pressure horizontal	max. 3.5 bar
Stroke vertical	30 mm
Depth adjustment	manual
Stroke horizontal	2.5 mm
Slitting speed (max.)	2,000 m/min.
Shear angle setting	with angle plate
360° hand guard	optional
Adjusting slide (Easy Set)	optional
Knife lubrication	optional
CSL (Constant Side Load)	optional
Razor blade head	optional
Dust extraction hood	optional
Quick change system for shear and razor blade cut	optional
Motor-driven	optional
Various adapters	optional

Special designs and features on request.

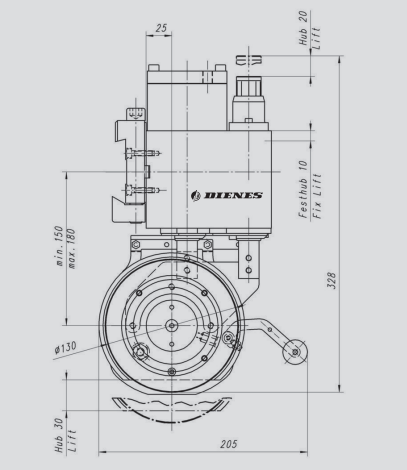

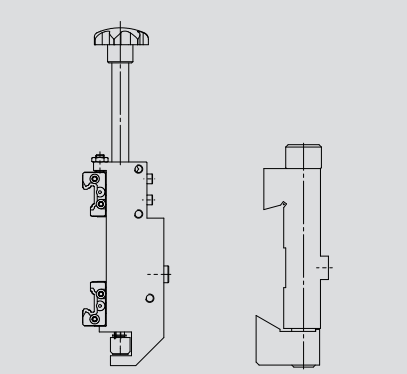

Standard adapters:
Linear and dovetail bar

Typical fields of operation:

- aluminium foil
- cable strap
- plastic
- paper
- adhesive tape / labels
- nonwoven
- packaging
- and many more

Benefits:

- reproducible slitting forces which can be adapted to the material
- optimal cutting edge quality even with difficult materials and high slitting speed
- increase in knife service life due to clearance-free, vibration reducing guidance system
- double guidance provides high stability
- Maximum flexibility due to narrow holder width
- optional features can be upgraded on demand

DIENES also manufactures the corresponding top and bottom knives as well as manual, semi-automatic and automatic slitting systems.

DIENES WERKE GMBH & CO. KG . KÖLNER STRASSE 7 . 51491 OVERATH . DEUTSCHLAND/GERMANY . TELEFON: +49 2206 605-0 . TELEFAX: +49 2206 605-111 . SALES@DIENES.DE . WWW.DIENES.DE